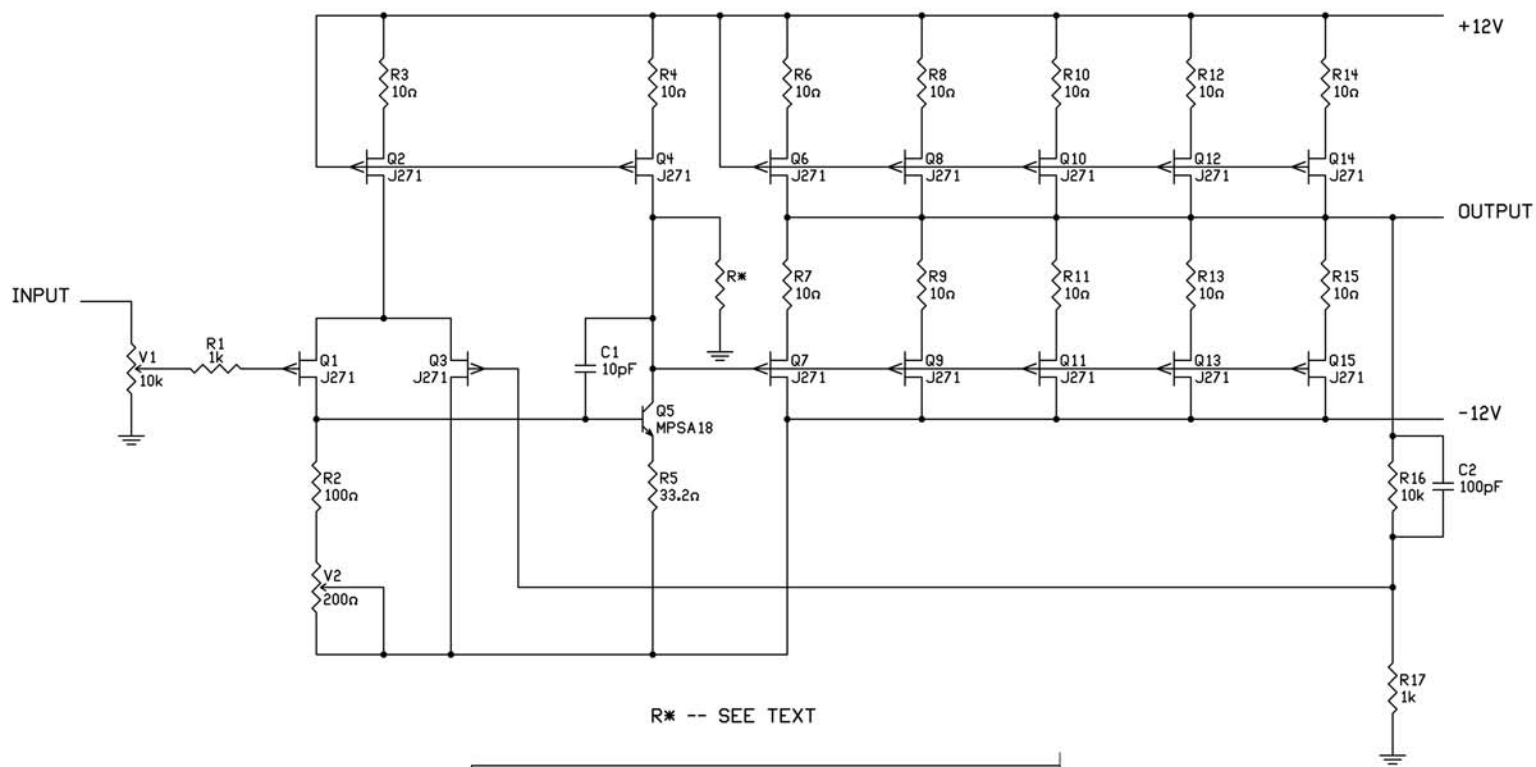

Co:	www.EnjoyTheMusic.com		
Title:	P-amp		
Board:	J271amp.sch	Revision:	A
Author:	Grey Rollins	Size:	A
Date:	5/10/09	Sheet 1 of 1	