4a

COMPLEMENTARY PUSH-PULL BUFFER

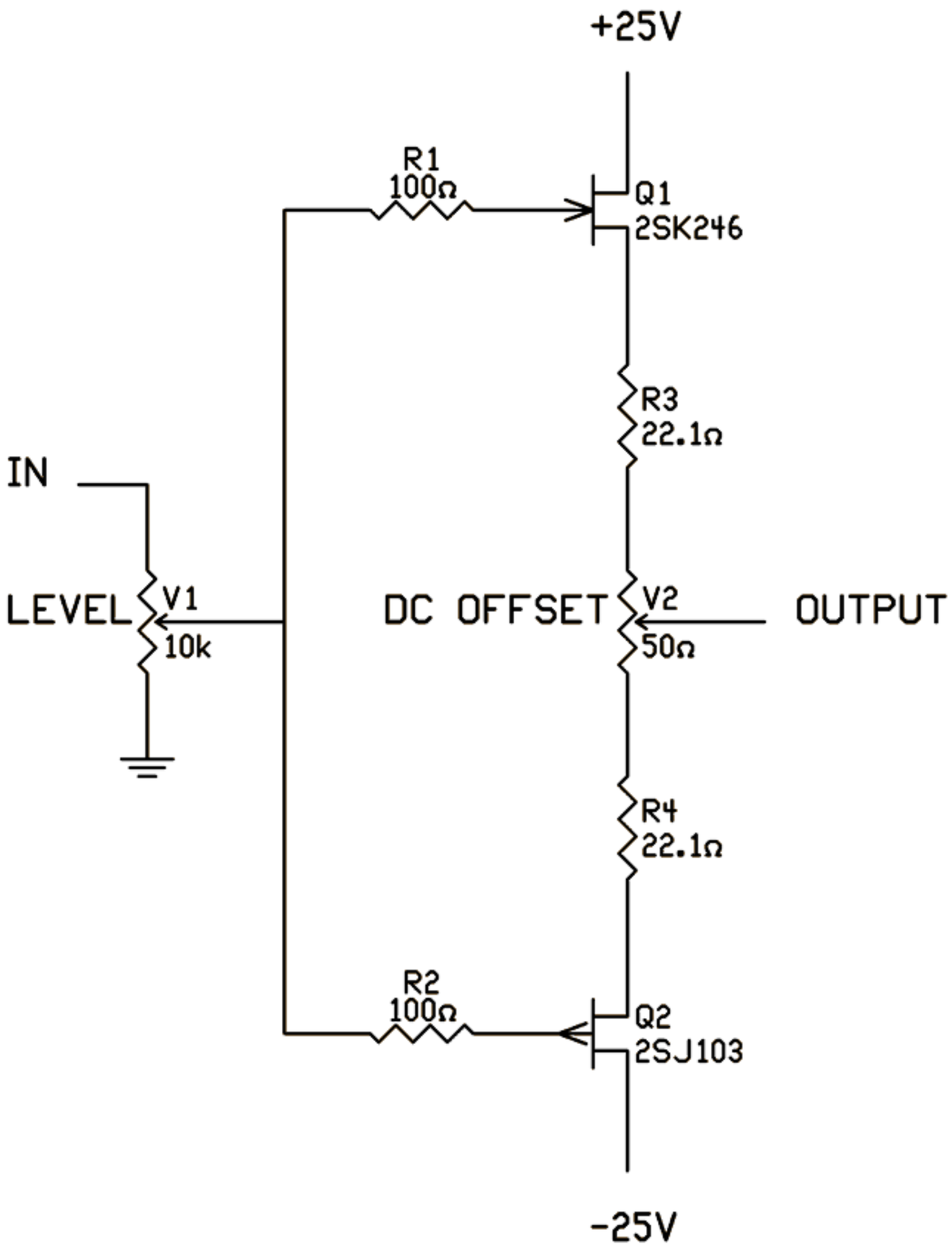

4b

SINGLE-ENDED PUSH-PULL BUFFER

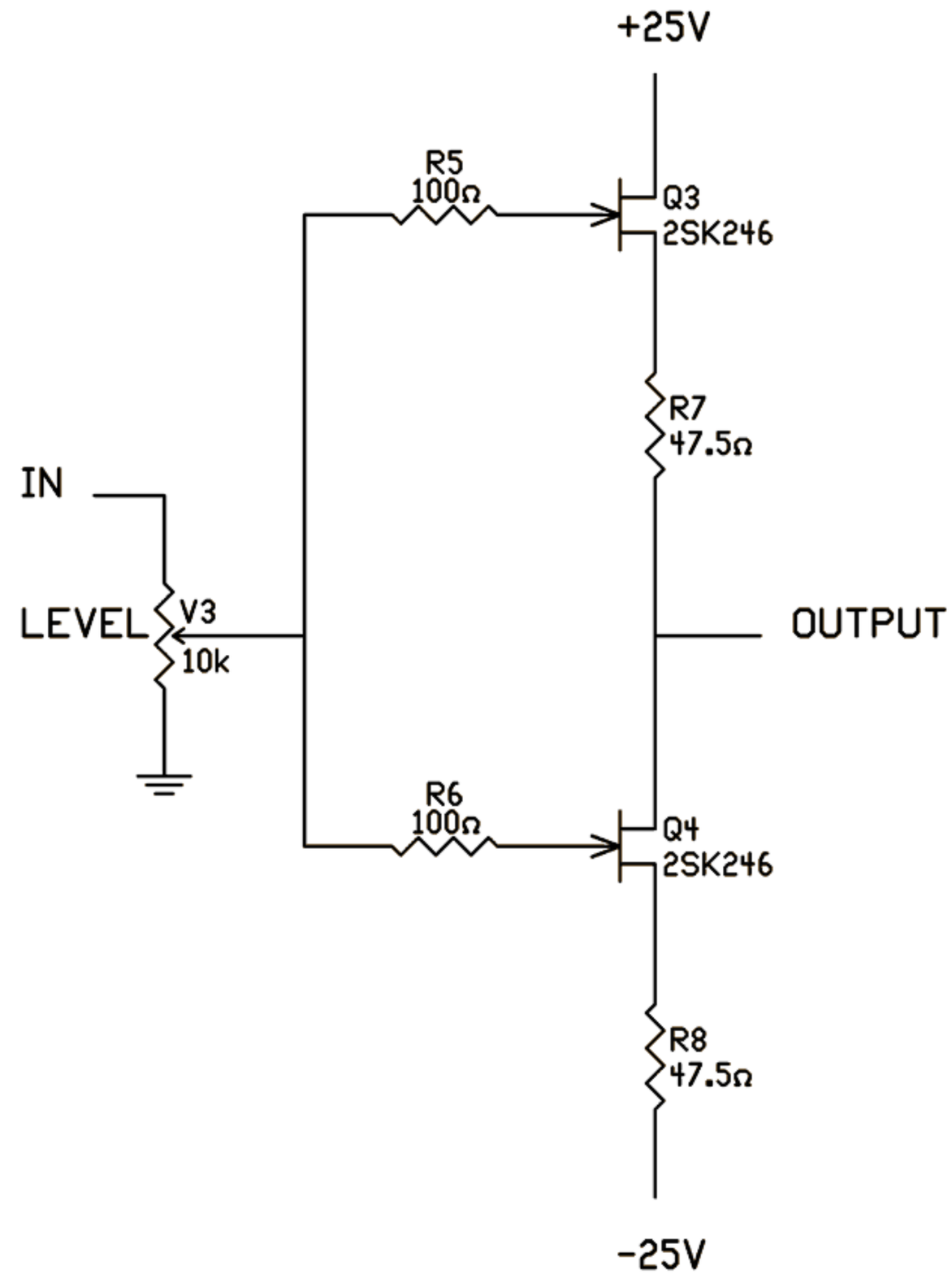

Co:	Enjoy the Music.com		
Title:	JFET buffers		
Board:	Schematic4.sch	Revision:	A
Author:	Grey Rollins	Size:	A
Date:	2/1/10	Sheet 1 of 1	

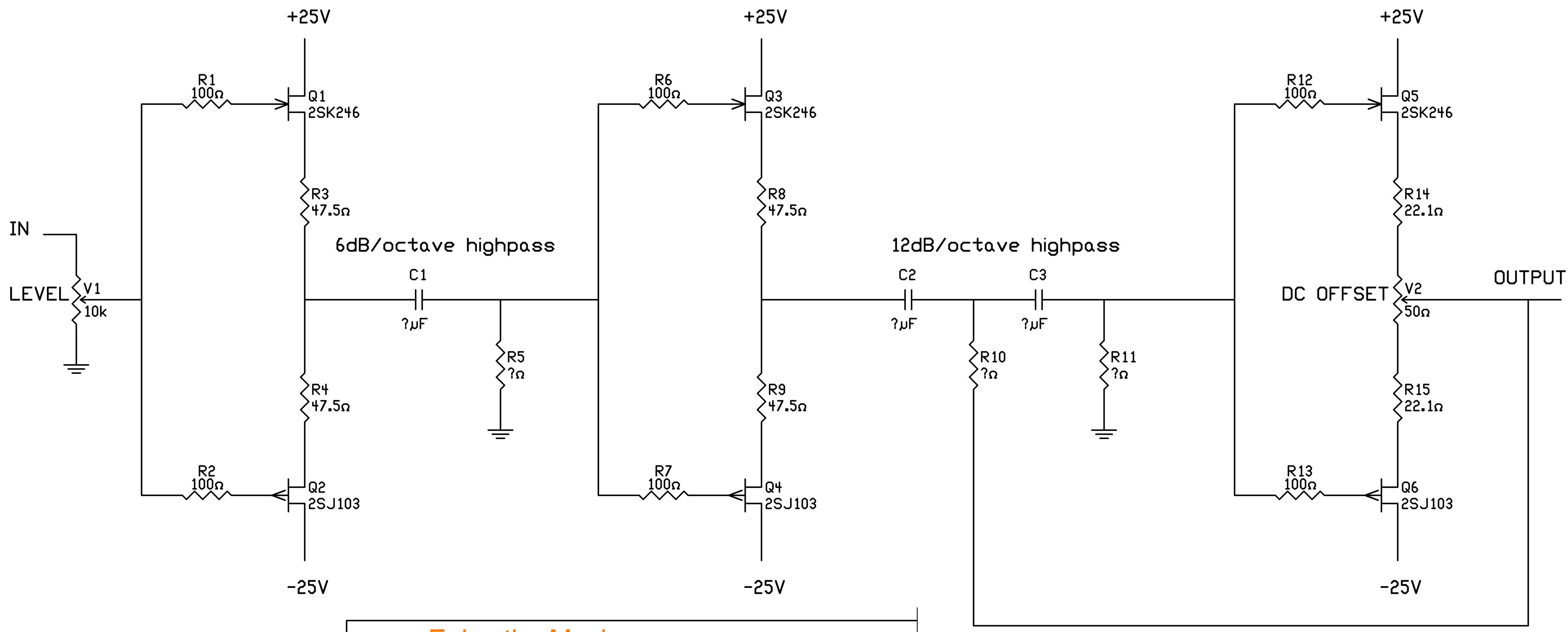

Co:	Enjoy the Music.com		
Title:	18dB/octave highpass		
Board:	Schematic5.sch	Revision:	A
Author:	Grey Rollins	Size:	A
Date:	2/1/10	Sheet	1 of 1

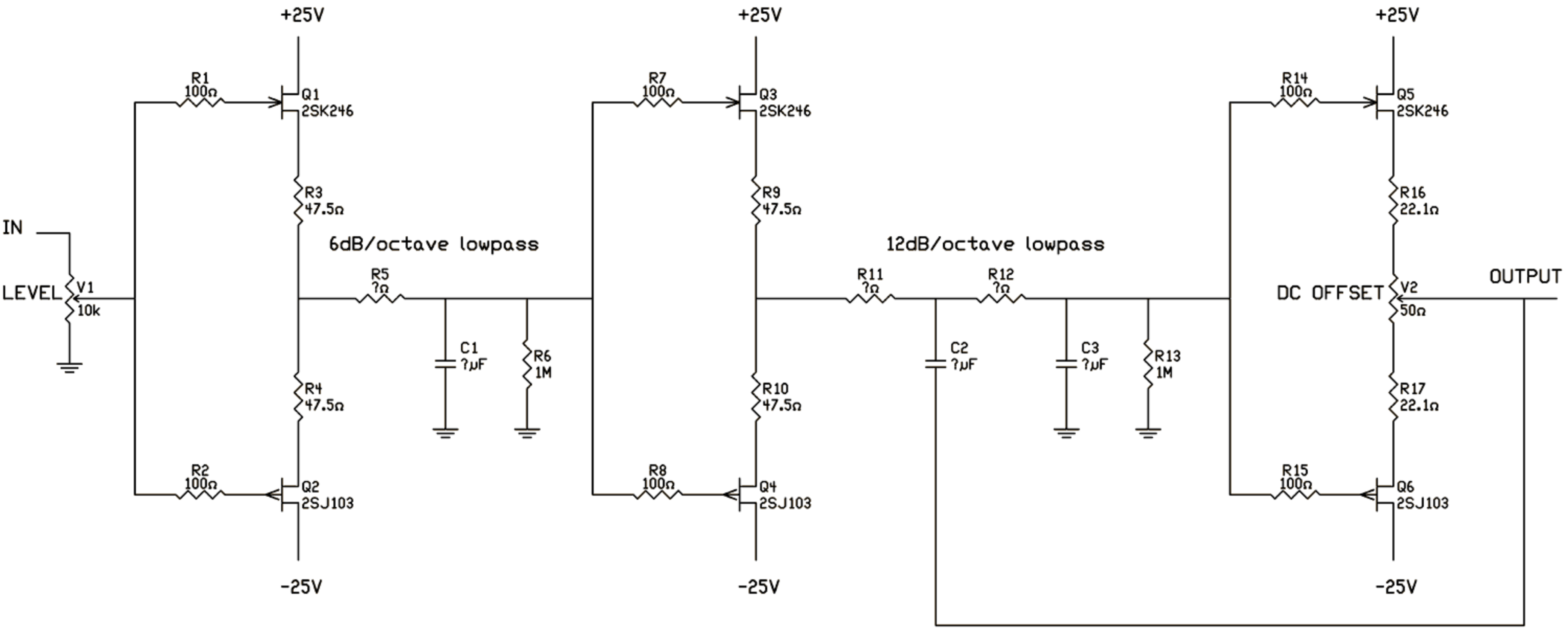

Co:	Enjoy the Music.com		
Title:	18dB/octave lowpass		
Board:	Schematic6.sch	Revision:	A
Author:	Grey Rollins	Size:	A
Date:	2/1/10	Sheet	1 of 1

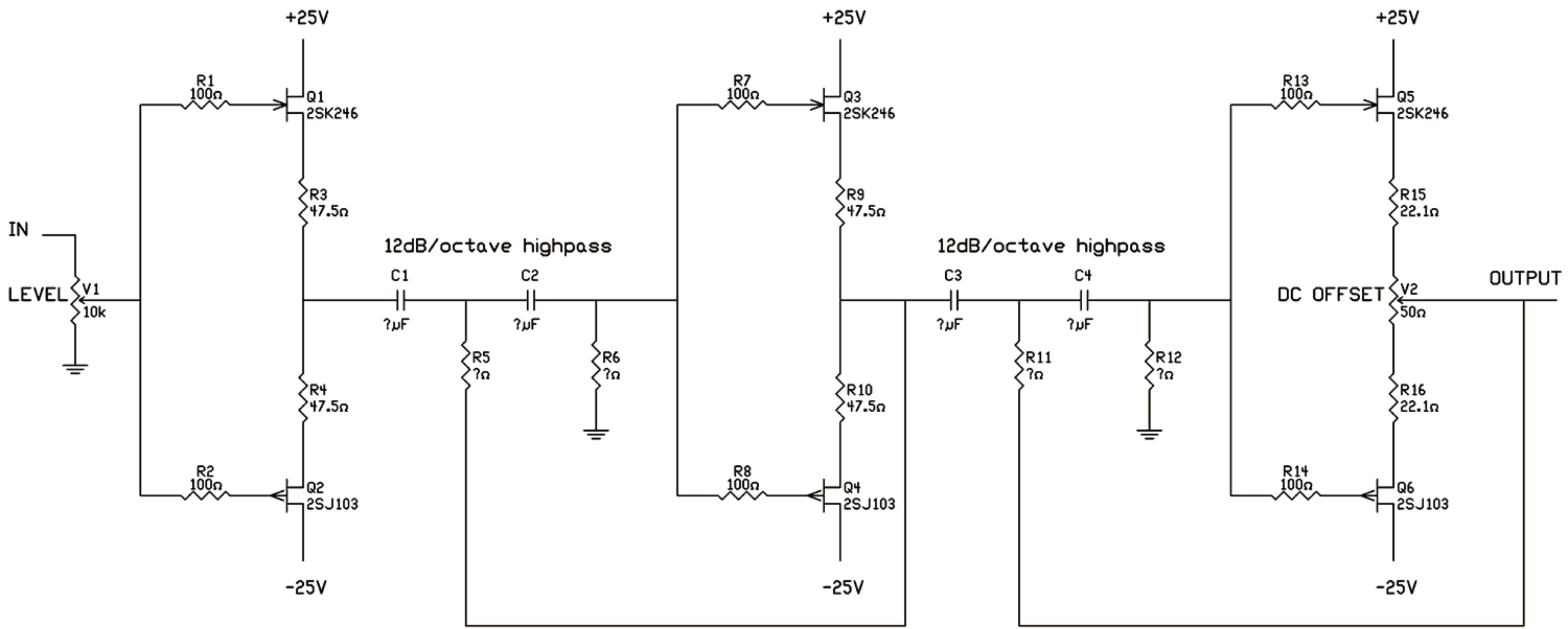

Co:	Enjoy the Music.com		
Title:	24dB/octave highpass		
Board:	Schematic7.sch	Revision:	A
Author:	Grey Rollins	Size:	A
Date:	2/1/10	Sheet	1 of 1

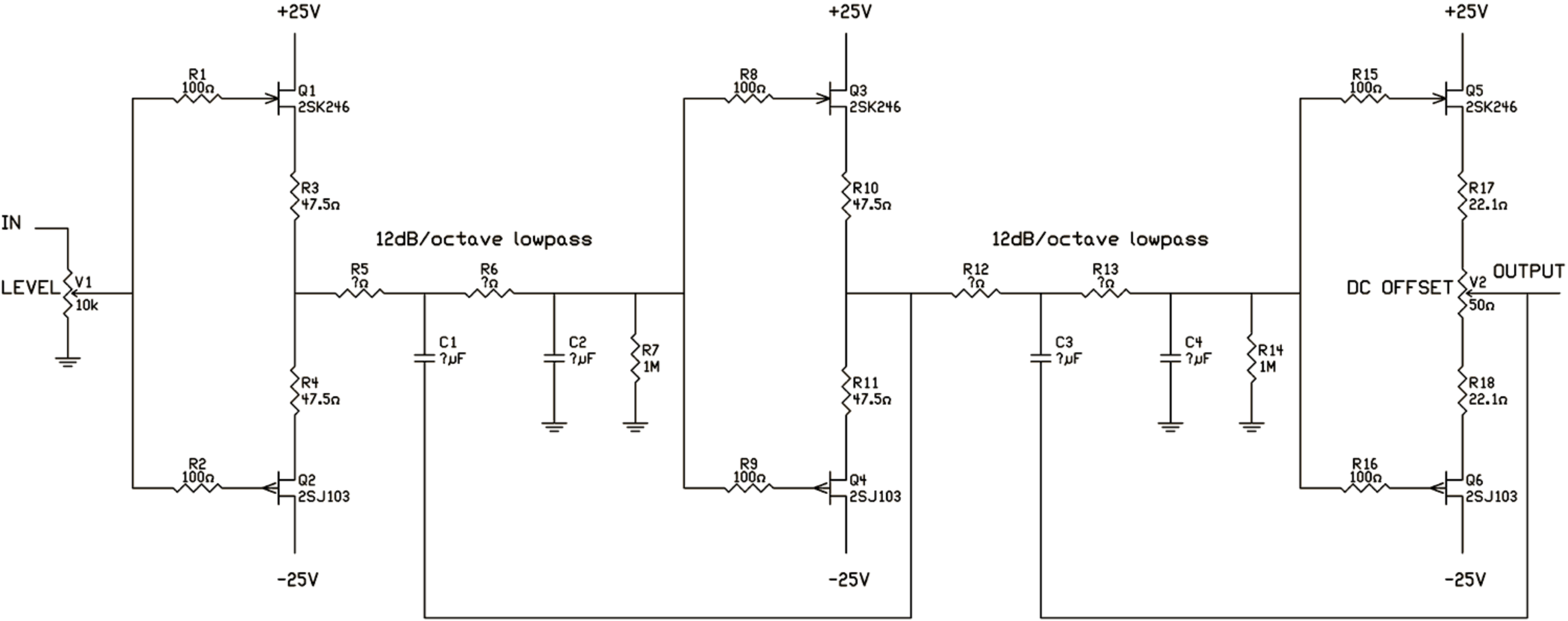

Co:	Enjoy the Music.com		
Title:	24dB/octave lowpass		
Board:	Schematic8.sch	Revision:	A
Author:	Grey Rollins	Size:	A
Date:	2/1/10	Sheet	1 of 1